STZ80-1.5-ER16

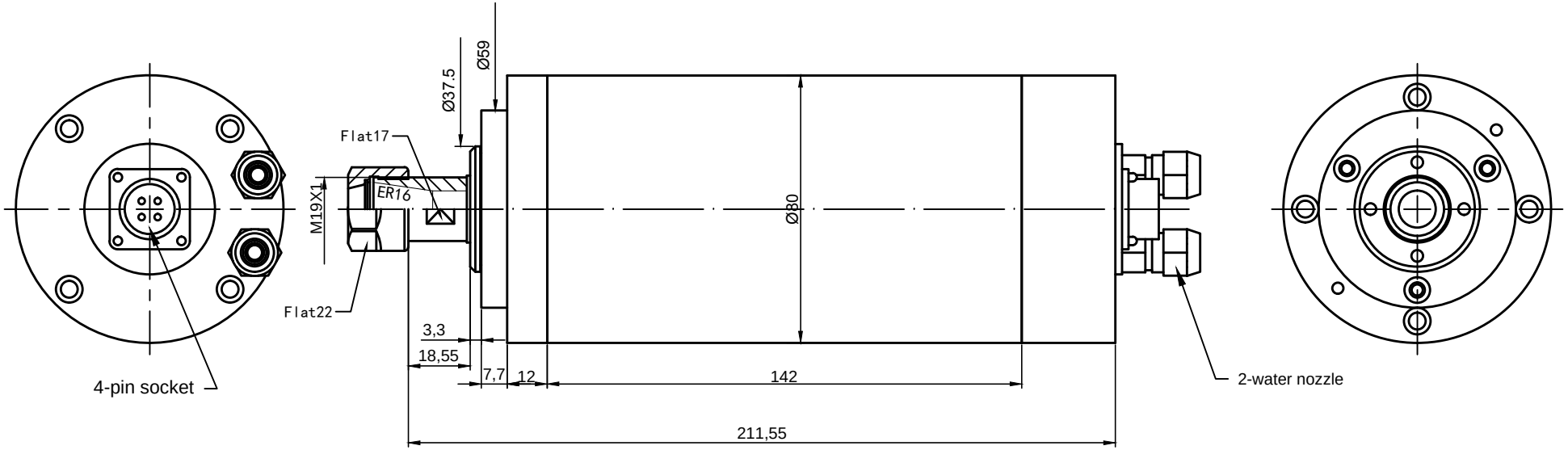

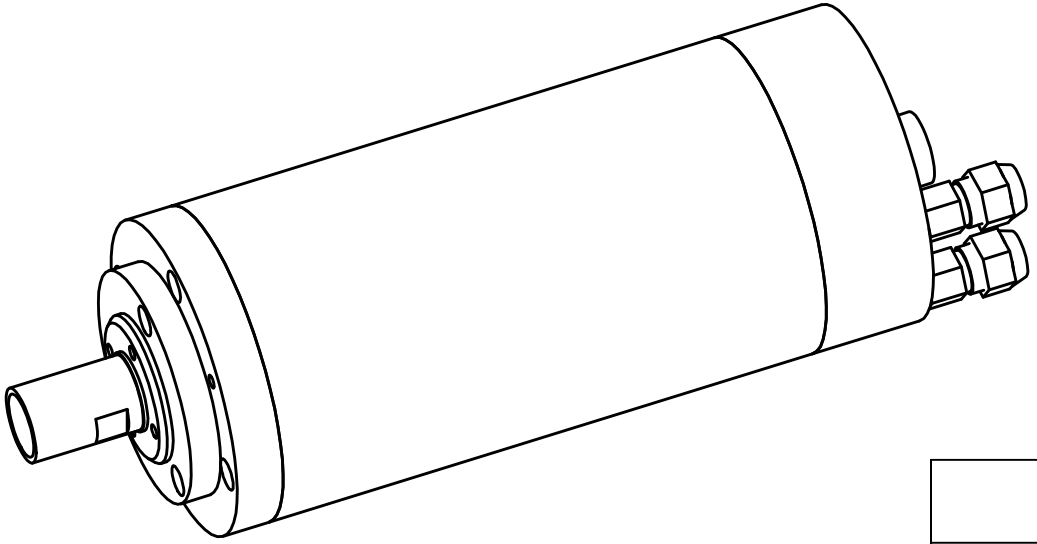

Wiring description

Pin	4-pin socket
1	U frequency converter phase
2	V frequency converter phase
3	W frequency converter phase
4	Wring ground ⏚

【CAUTION】
Rotating mode：anticlockwise from the shaft extension end

WHD SPINDLE MOTOR

Power	Voltage	Current	Shaft	Frequency	Speed	Cool	Weight
1.5KW	220V	6.0A	ER16	400Hz	24000RPM	Water	4.4KG