STF52-156B-6.0-ER32-JXH

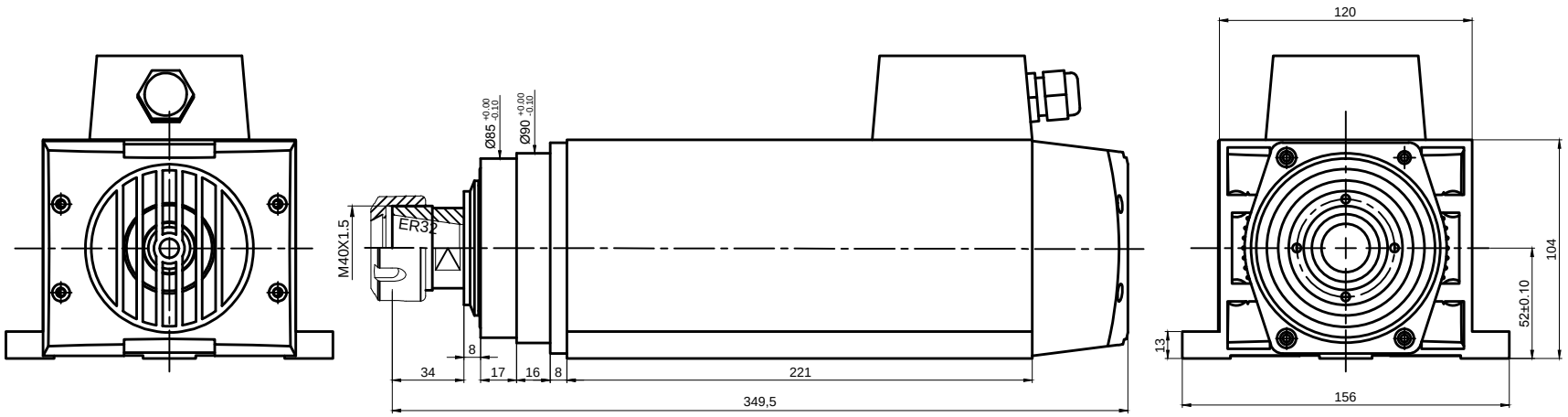

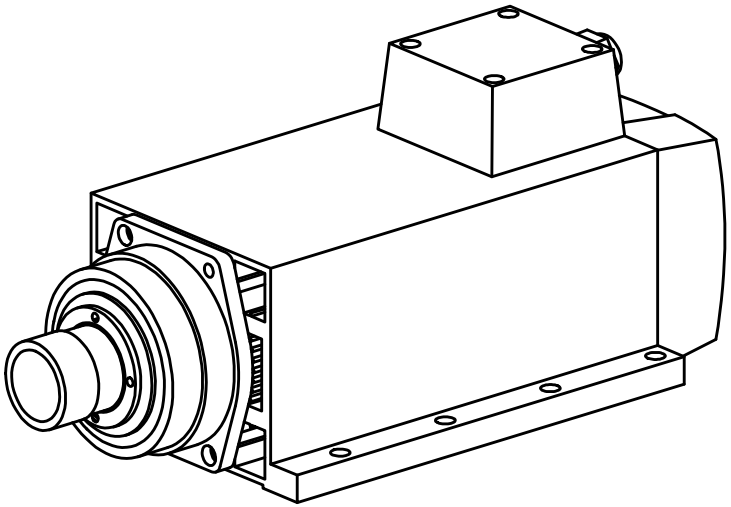

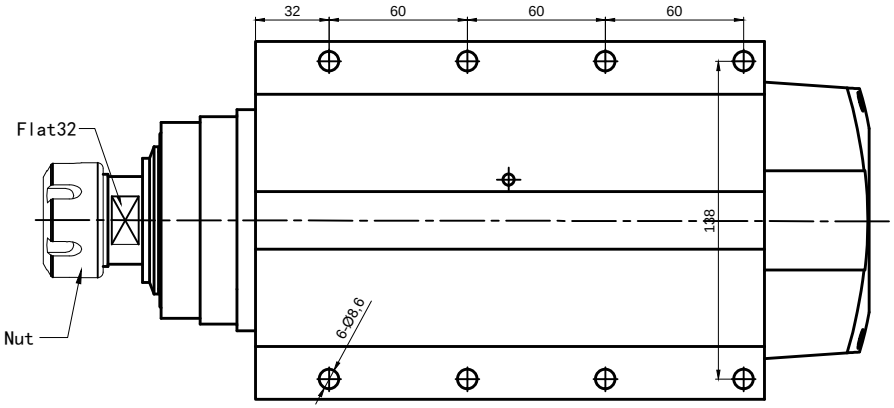

Y380V

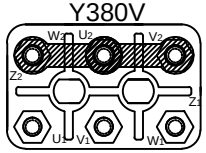

【CAUTION】

- Rotating mode：anticlockwise from the shaft extension end.
- The spindle is single voltage 380V. Do not change the direction of the copper!

WHD SPINDLE MOTOR

Power	Voltage	Current	Shaft	Frequency	Speed	Cool	Weight
6.0KW	380V	12.8A	ER32	300Hz	18000RPM	Air	14KG